Royal Exclusiv pumps & skimmers

Klaus Jansen // Richard-Byrd-Str. 7 // 50829 Cologne // Germany

Fon +49(0)221/222886 0 // Fax +49(0)221/22288622
info@royal-exclusiv.de // www.royal-exclusiv.de

Since 1986

★★★★★

vs14

Data sheet and list of spare parts for Bubble King® Supermarin 300

For all Bubble King® Supermarin protein skimmer 300

ENG

Royal Exclusiv pumps & skimmers

Klaus Jansen // Richard-Byrd-Str. 7 // 50829 Cologne // Germany

Fon +49(0)221/222886 0 // Fax +49(0)221/22288622
info@royal-exclusiv.de // www.royal-exclusiv.de

Since 1986

★★★★★

Data sheet for protein skimmer Bubble King® Supermarin 300

Protein skimmer Bubble King® Supermarin 300 **Product no.: 92** **1755,60 €**

for aquariums from 1.500 ltr. - 4.000 ltr.

Skimmer-series Bubble King® Supermarin for aquarium-grounds. For internal installation in filter-systems. Particularly suitable for fast, effective, and wet skimming. The so-called sledgehammer, the universe of all solution, for many fish and aquariums with strong contamination.

Technical data Bubble King® Supermarin 300:

3.500 ltr./h Air - 5.000 ltr./h Water = 1 BK 2000 / 1 MBK 1500 pump
with AKB- (anti-lime-bypass) and ozon- plug
Baseplate: Ø 32 cm / height ~ 59 cm

Skimmer-pumps: Bubble King® 2000 + Mini Bubble King 1500 with AKB
Delivery rate: 3.500 l/h Air inlet ~ 5.000 l/h Water inlet
Wattage - active power: P = 96 Watt/h (58Watt+38Watt)
Operating voltage: 230 Volt 50 Hz (also in 110V/60Hz available)
Protection class: IP 68
Water level: ~ 180 mm up to ~ 230 mm (ideal ~ 200 mm)
Weight skimmer: 18 kg inclusiv pumps
Height of intake side: center 95 mm (BK2000) center 65 mm (MBK1500)

Dimension skimmer without pump: 380 mm wide / 340mm length / ~ 590mm height
Dim. skimmer with master pump (90° to torque tube): 560mm wide / 510mm length / ~590mm height
Dim. skimmer with master pump (compared with torque tube):
610mm wide / 510mm length / ~ 590mm height //// Height silicon outlet (cleanout) ~ 420 mm

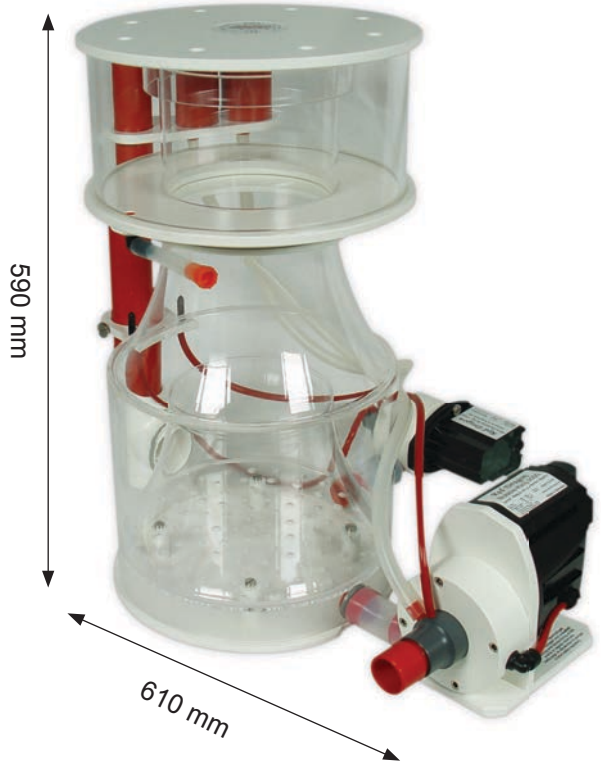

Royal Exclusiv pumps & skimmers

Klaus Jansen // Richard-Byrd-Str. 7 // 50829 Cologne // Germany

Fon +49(0)221/222886 0 // Fax +49(0)221/22288622
info@royal-exclusiv.de // www.royal-exclusiv.de

Since 1986

Protein skimmer Bubble King® Supermarin 300

Product no.: 92

Protein skimmer Bubble King® Supermarin 300 for internal filter assembly in aquariums of 1.500 l to 4.000 l.

The skimmer is equipped with two Red Dragon® Bubble King® skimmer pump from Royal Exclusiv®, installed on the side.

A continuously height-adjustable telescopic tube is provided to regulate the water level.
The swivelling water outlet at the side has a tube diameter of 50 mm.
For the fine adjustment of the water level, there is also a 360° pivotable PVC torque tube with a fitted dismountable simple silencer.

The complete skimmer cup can be unscrewed from the pillar tube. The lift height required for this is 30 mm. A pivotable tap is fitted to the bottom for draining off the absorbate.

The master skimmer pump is equipped with a descaling bypass. The pump is connected to the skimmer on the pressure side through a loosely attached Ø 30 mm silicon tube connection piece.

The 9 mm silicon tube is used to transport the air exhaust from the silencer to the pump.
The pumps can be connected in two positions with the skimmers. The grey 6 mm connecting piece on the nozzle base part is set up for ozone supply. The red screw-in nozzle is to set the water volume. The water pumping capacity can be increased by turning.

Important maintenance information!!!
For the smooth functioning of the protein skimmer, the skimmer pump must be regularly cleaned and decalcified!

Royal Exclusiv pumps & skimmers

Klaus Jansen // Richard-Byrd-Str. 7 // 50829 Cologne // Germany

Fon +49(0)221/222886 0 // Fax +49(0)221/22288622
info@royal-exclusiv.de // www.royal-exclusiv.de

Since 1986

Protein skimmer Bubble King® Supermarin 300

Product no.: 92

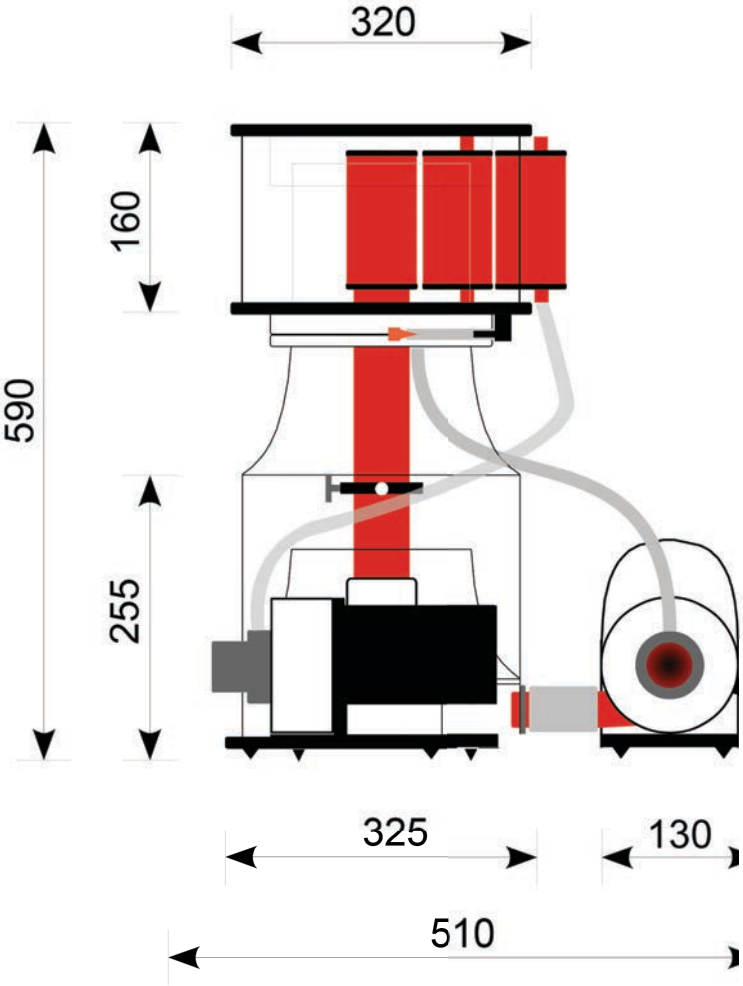

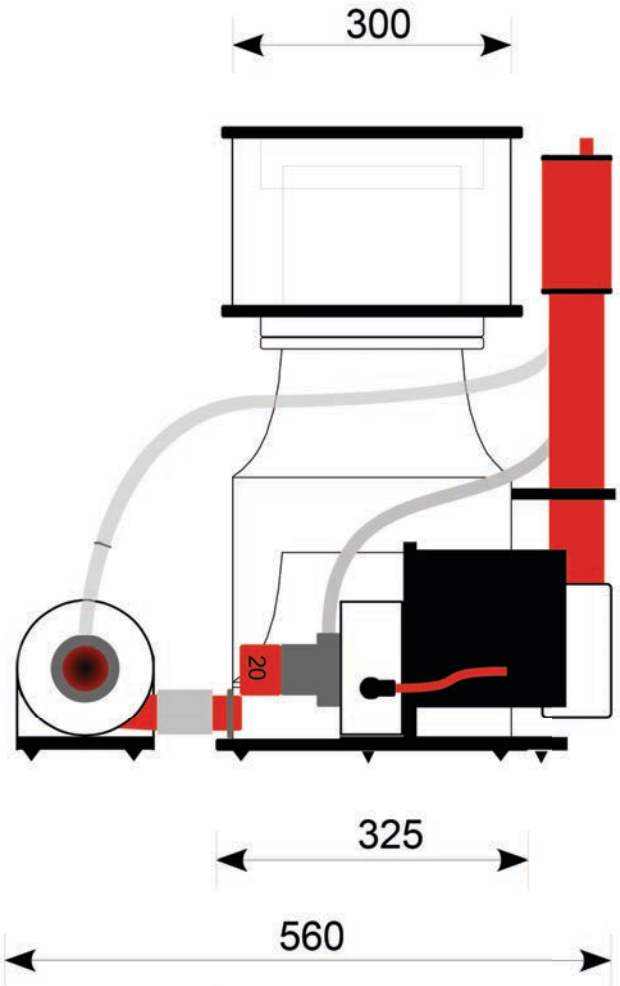

Royal Exclusiv pumps & skimmers
Klaus Jansen // Richard-Byrd-Str. 7 // 50829 Cologne // Germany
Fon +49(0)221/222886 0 // Fax +49(0)221/22288622
info@royal-exclusiv.de // www.royal-exclusiv.de

Since 1986

Protein skimmer Bubble King® Supermarin 300

Product no.: 92

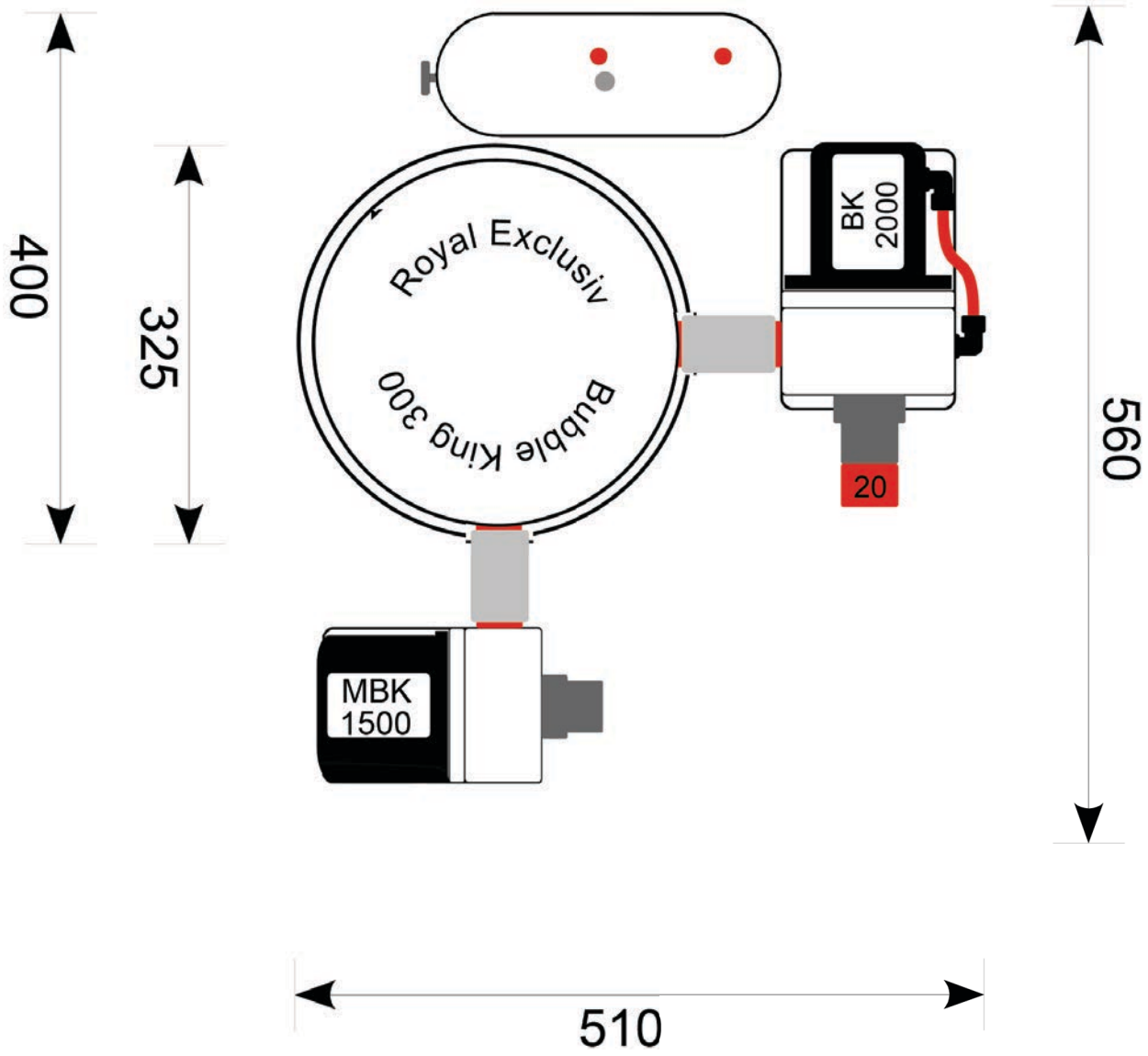

Royal Exclusiv pumps & skimmers

Klaus Jansen // Richard-Byrd-Str. 7 // 50829 Cologne // Germany

Fon +49(0)221/222886 0 // Fax +49(0)221/22288622
info@royal-exclusiv.de // www.royal-exclusiv.de

Since 1986

Protein skimmer Bubble King® Supermarin 300 **Product no.: 92**

list of spare parts	***product no.*** *(110V)*	*(230V)*	*Price*
resonator double complete for torque tube Ø 50mm	291/SM	291/SM	**54,60 €**
silicon outlet (cleanout)	298	298	**23,52 €**
lid complete with lever ring	314	314	**110,78 €**
cup with conus / standpipe / outlet (cleanout)	355	355	**352,80 €**
silicon O - ring seal for cup / conus 180x3,0mm	334	334	**9,14 €**
silicon-tube Ø 32mm 75mm long	296	296	**8,24 €**
torque tube Ø 50mm PVC red	345	345	**27,83 €**
plastic screw for pipe bracket 6 x 12mm	181-1	181-1	**0,53 €**
titan screw locking torque tube 6 x 16mm	183-7	183-7	**10,40 €**
rubber feets 4 pieces	180	180	**4,20 €**
silicon-hose 9 x 3mm (price per meter)	185	185	**19,43 €**
skimmerbody + conus,T-fitting, pipe bracket	364/14	364/14	**579,60 €**
baseplate PVC white Ø 320 mm	401/14	401/14	**110,88 €**
skimmer-pump MBK 1500 complete	118/1-A	118/2-A	**579,60 €**
part motorblock MBK 1500	139/1	139/2	**184,80 €**
pump head PVC MBK 1500 white with AKB	245	245	**151,20 €**
nozzle for Slave Pumpe MBK 1500	279	279	**24,36 €**
rotor for MBK 1500 complete with metal shaft	125/1-5	125/2-5	**151,20 €**
skimmer-pump BK 2000 complete	117/1	117/2	**663,60 €**
motor block BK 2000 with AKB (anti-lime-bypass)	138/1-2	138/2-2	**369,60 €**
pump head PVC white with AKB (anti-lime-bypass)	255	255	**207,90 €**
rotor for BK 2000 complete with metal shaft	125/1-3	125/2-3	**215,25 €**
carbon-bearing with O-ring (price for one piece)	155	155	**6,83 €**
titan screws for BK2000 pump head 4 pieces	183	183	**26,88 €**
titan screws for motor block 4 pieces	183-1	183-1	**12,29 €**
titan screws for MBK1500 pump head 3 pieces	183-3	183-3	**12,60 €**
pump holder turned PVC white	151	151	**109,20 €**
AKB (anti-lime-bypass) - hose Ø 8mm red	295	295	**4,20 €**
nozzle base part with ozon plug	284	284	**17,64 €**
nozzle 20mm	286	286	**19,22 €**
titan screw for base plate 1 piece	183-9	183-9	**3,78 €**
silicon O - ring 65 x 4mm for pump head MBK 1500	171	171	**4,20 €**
silicon O - ring 90 x 2,5mm for pump head BK 2000	169	169	**5,36 €**
silicon O - ring 82 x 4mm for motor block BK 2000	170	170	**4,67 €**

For the list of spare parts for Red Dragon® 3 skimmer pump see separate document. Downloadable on our website under Red Dragon® 3 skimmer pump.

Royal Exclusiv pumps & skimmers

Klaus Jansen // Richard-Byrd-Str. 7 // 50829 Cologne // Germany

Fon +49(0)221/222886 0 // Fax +49(0)221/22288622
info@royal-exclusiv.de // www.royal-exclusiv.de

Since 1986

Protein skimmer Bubble King® Supermarin 300

Product no.: 92

Please replace the x with the appropriate number for the voltage of 110/230 Volt.

spare part

resonator double complete
for torque tube Ø 50mm
291/SM 54,60 €

spare part

silicon outlet (cleanout)
298 23,52 €

spare part

lid complete with lever ring
314 110,78 €

spare part

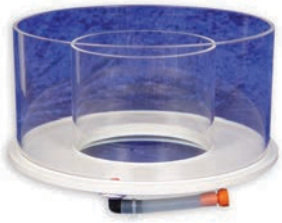

cup with conus / standpipe
and outlet (cleanout)
355 352,80 €

spare part

silicon O - ring seal for
cup / conus 180x3,0mm
334 9,14 €

spare part

silicon-hose Ø 32mm
75mm long
296 8,24 €

spare part

torque tube Ø 50mm PVC
345 27,83 €

spare part

plastic screw
for pipe bracket 6 x 12mm
181-1 0,53 €

spare part

titan screw locking
torque tube 6 x 16mm
183-7 10,40 €

spare part

rubber feets 4 pieces
180 4,20 €

spare part

silicon-hose 9 x 3mm
(price per meter)
185 19,43 €

spare part

skimmerbody + conus,
T-fitting, pipe bracket
364/14 579,60 €

spare part

baseplate
PVC white Ø 320 mm
401/14 110,88 €

spare part

skimmer-pump
MBK 1500 complete
118/x-A 579,60 €

spare part

part motorblock MBK 1500
139/x 184,80 €

spare part

pump head PVC MBK 1500
white with AKB
245 151,20 €

For more information, please visit www.royal-exclusiv.de. Simply enter the part number or name into the search box or email: info@royal-exclusiv.de.
All information subject to change. We try our best, but printing errors reserved.

Royal Exclusiv pumps & skimmers

Klaus Jansen // Richard-Byrd-Str. 7 // 50829 Cologne // Germany

Fon +49(0)221/222886 0 // Fax +49(0)221/22288622
info@royal-exclusiv.de // www.royal-exclusiv.de

Since 1986

Protein skimmer Bubble King® Supermarin 300

Product no.: 92

Please replace the x with the appropriate number for the voltage of 110/230 Volt.

spare part

nozzle for slave pump
MBK 1500
279 24,36 €

spare part

rotor for MBK 1500
complete with metal shaft
125/x-5 151,20 €

spare part

skimmer-pump BK 2000
complete
117/x 663,60 €

spare part

motor block BK 2000 with
AKB (anti-lime-bypass)
138/x-2 369,60 €

spare part

pump head PVC BK 2000
white with AKB
255 207,90 €

spare part

nozzle base part with
ozon plug for BK 2000
284 17,64 €

spare part

rotor for BK 2000 complete
with metal shaft
125/x-3 207,90 €

spare part

carbon-bearing with O-ring
(price for one piece)
155 6,83 €

spare part

titan screws for BK 2000
pump head 4 pieces
183 26,88 €

spare part

titan screws for motor
block BK 2000 4 pieces
183-1 12,29 €

spare part

titan screws for MBK1500
pump head 3 pieces
183-3 12,60 €

spare part

pump holder turned
PVC white
151 109,20 €

spare part

AKB (anti-lime-bypass) -
hose Ø 8mm red
295 4,20 €

spare part

nozzle 20mm
286 19,22 €

spare part

titan screw
for base plate 1 piece
183-9 3,78 €

spare part

silicon O-ring 65x4mm for
pump head MBK 1500
171 4,20 €

For more information, please visit www.royal-exclusiv.de. Simply enter the part number or name into the search box or email: info@royal-exclusiv.de.
All information subject to change. We try our best, but printing errors reserved.

Royal Exclusiv pumps & skimmers

Klaus Jansen // Richard-Byrd-Str. 7 // 50829 Cologne // Germany

Fon +49(0)221/222886 0 // Fax +49(0)221/22288622
info@royal-exclusiv.de // www.royal-exclusiv.de

Since 1986

Protein skimmer Bubble King® Supermarin 300

Product no.: 92

Please replace the x with the appropriate number for the voltage of 110/230 Volt.

spare part

silicon O-ring 90x2,5mm
for pump head BK 2000
169 5,36 €

spare part

silicon O-ring 82x4mm for
motor block BK 2000
170 4,67 €

accessories	***product no.*** *(110V)*	*(230V)*	*Price*
add on resonator Ø 63mm	999	999	**33,60 €**
PVC pipe clip Ø 63mm for wall and ceiling mounting	930-63	930-63	**6,83 €**
resonator - inlay	294-1	294-1	**6,20 €**
silicon grease tube 6g	030/6	030/6	**2,63 €**
silicon grease tube 25g	030/25	030/25	**7,88 €**

accessories

add on resonator
Ø 63mm
999 33,60 €

accessories

PVC pipe clip Ø 63mm for
wall and ceiling mounting
930-63 6,83 €

accessories

resonator - inlay
294-1 6,20 €

accessories

silicon grease tube 6g
030-6 2,63 €

For more information, please visit www.royal-exclusiv.de. Simply enter the part number or name into the search box or email: info@royal-exclusiv.de.
All information subject to change. We try our best, but printing errors reserved.

Royal Exclusiv pumps & skimmers

Klaus Jansen // Richard-Byrd-Str. 7 // 50829 Cologne // Germany

Fon +49(0)221/222886 0 // Fax +49(0)221/22288622
info@royal-exclusiv.de // www.royal-exclusiv.de

Since 1986

Protein skimmer Bubble King® Supermarin 300

Product no.: 92

Please replace the x with the appropriate number for the voltage of 110/230 Volt.

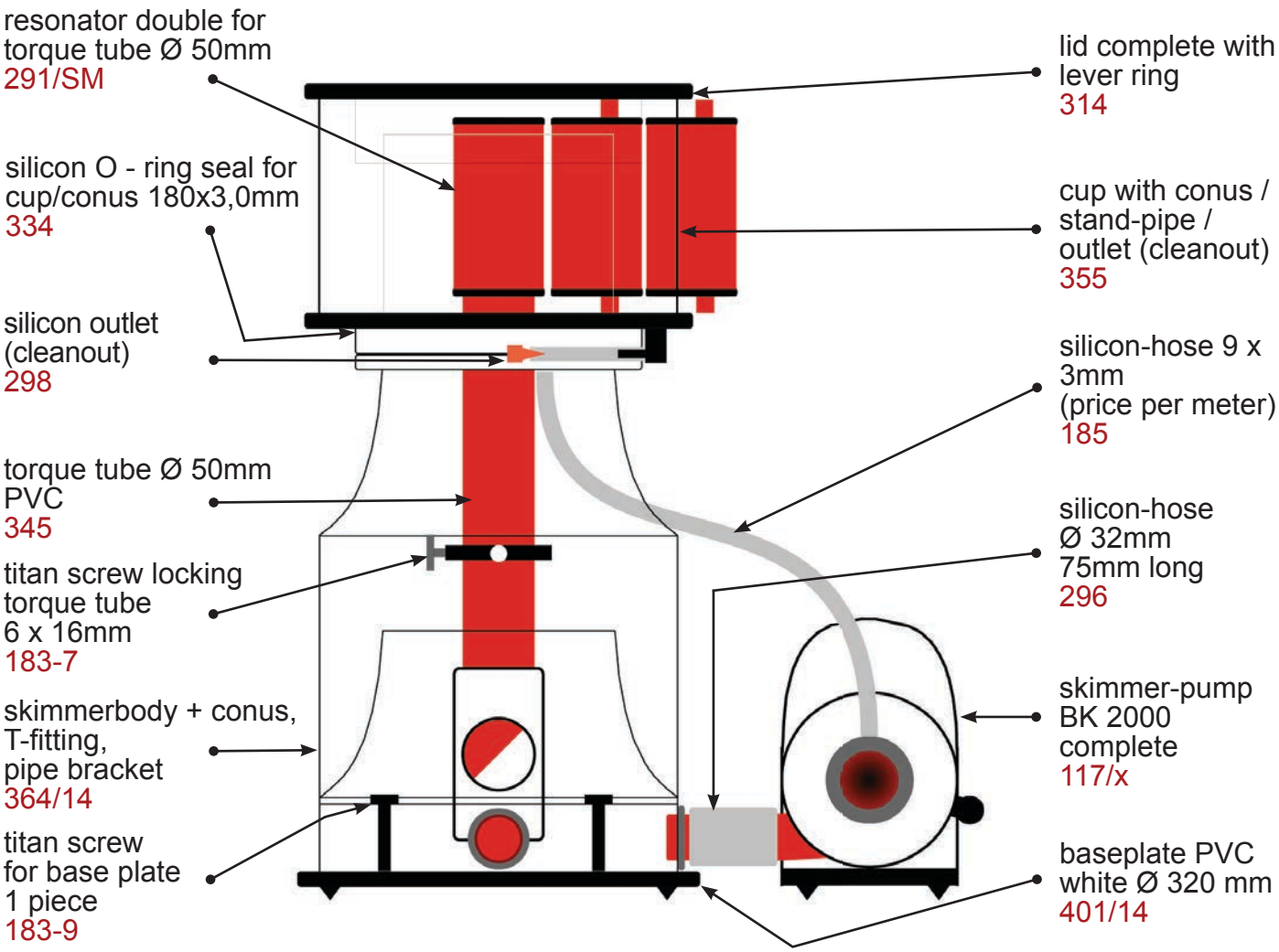

Royal Exclusiv pumps & skimmers

Klaus Jansen // Richard-Byrd-Str. 7 // 50829 Cologne // Germany

Fon +49(0)221/222886 0 // Fax +49(0)221/22288622
info@royal-exclusiv.de // www.royal-exclusiv.de

Since 1986

Protein skimmer Bubble King® Supermarin 300

Product no.: 92
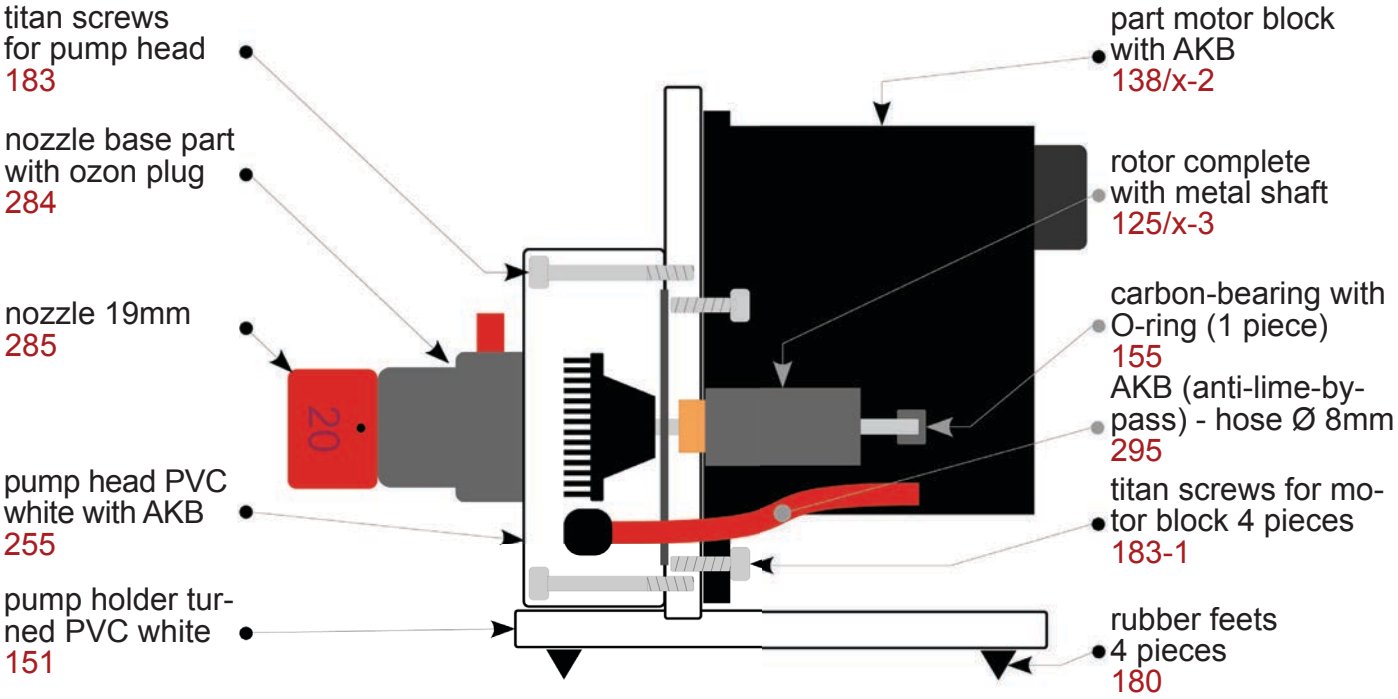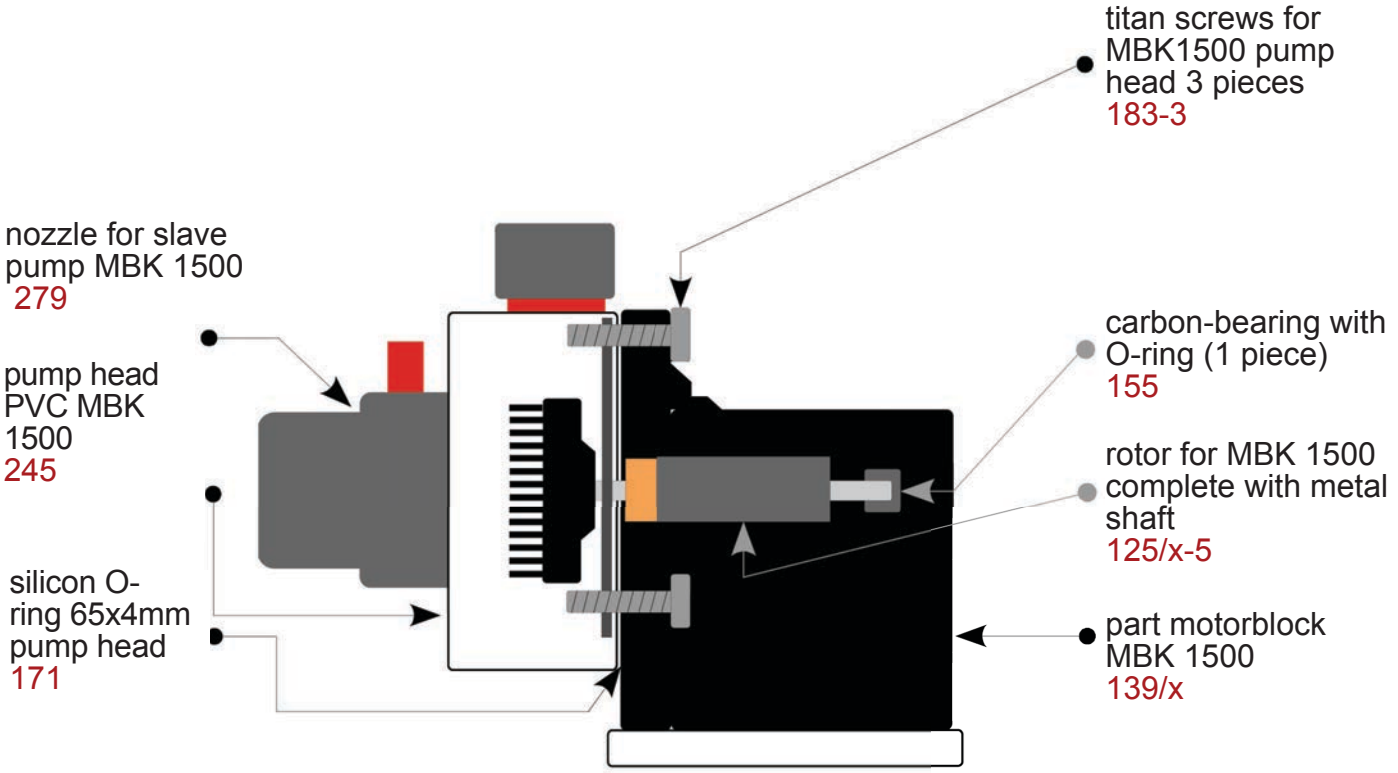
Please replace the x with the appropriate number for the voltage of 110/230 Volt.